1. LONG CHANNEL MOSFET

CONTENTS

- Part 1:
  - Me
  - CMOS circuits
  - Up to the midterm
- Part 2:
  - Dr. Ahmed
  - Memories
  - Design flow of digital ICs

CONTENTS OF PART 1

- MOSFET
- Ratioed logic families
- Combinational CMOS gates
- Dynamic CMOS gates
- Design in a chain
- Sequential CMOS gates
- Static timing in a synchronous pipeline

OBJECTIVES

- Understand how to build circuits that perform logic functions using MOSFET transistors
- Understand the factors that affect delay and power dissipation in a digital circuit
- Design a pipeline that uses one clock signal
- Recognize the following terms and their fundamental nature:
  - Path, critical path, hold-time, setup-time, hold-time violation, setup-time violation

TOPICS IN DETAIL

- MOSFET
  - MOSFET as a switch, current in MOSFET, regions of MOSFET operation, contrasting NMOS and PMOS, impact of body effect and channel length modulation, Scaling effect
- Ratioed logic
  - How to build an inverter using a driver and a load, how to extend this to any logic function, why this basic architecture will not work for us regardless of the nature of the driver and the load

CONTENTS IN DETAIL

- CMOS combinational circuits
  - Design any logic function in CMOS, understand why CMOS works, capacitances and impedance in a CMOS gate, dynamic behavior of a CMOS gate, dynamic power dissipation, sizing gates to target delay
- Dynamic CMOS gates
  - Build CMOS gates that use high impedance nodes, understand how leakage, charge sharing, and cascading complicate dynamic gates, understand the logic behind domino logic and N-P logic

CONTENTS IN DETAIL

- Design in a chain
  - Understand why sizing a gate in isolation will never optimize delay, size a chain of inverters, size a chain of random gates, understand the abstract nature of logical effort and parasitic delay, understand the physical nature of electrical and total efforts
- Sequential CMOS gates
  - Design CMOS latches, design CMOS registers, understand and calculate setup time and clock to Q delay, understand clock overlaps, hold-time, and racing N

CONTENTS IN DETAIL

- Static timing in a synchronous pipeline
  - Find the clock period of a pipeline, understand when setup-time violations happen and how to solve them, understand how hold-time violations happen and how to solve them, the impact of process variations on setup and hold time violations

GEOMETRY OF THE MOSFET

- See the symmetry?

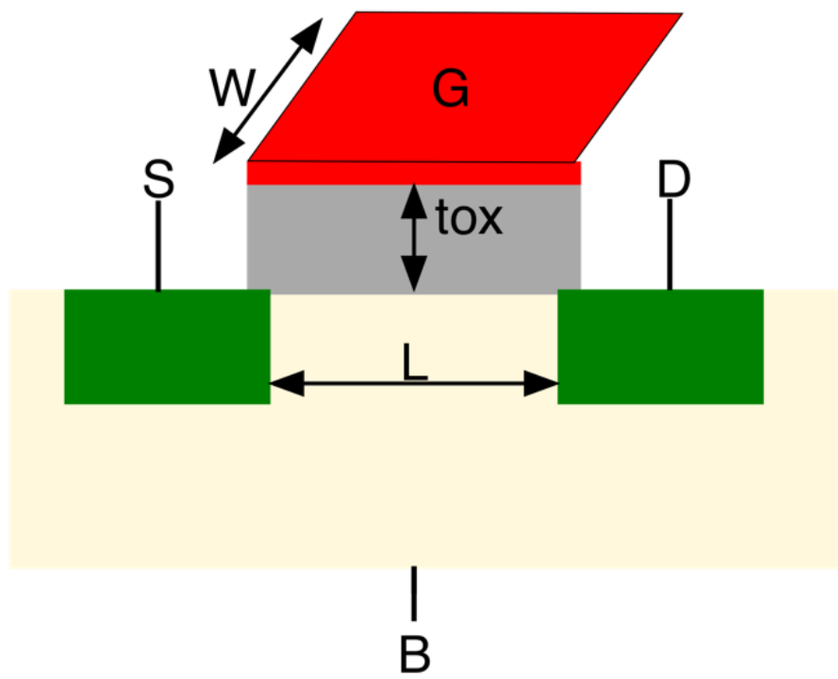

WHERE DO ELECTRONS FROM INVERSION COME FROM?

- In a MOS-CAP where do the electrons come from?
- In a MOSFET where do they come from?
- What difference does this make?

VOLTAGE AT CHARGE AT POINT C IN THE CHANNEL

$$V_{gc} = V_{gs} - V_{cs}$$

$$Q_{inv} = -C_{ox}(V_{gs} - V_{cs} - V_{th})$$

- Note we are only considering inversion charges

DRIFT IN THE CHANNEL

$$I = Q_{inv} W v$$

$$v = -\mu_n \xi(x)$$

$$\xi(x) = -\frac{dV_c}{dx}$$

- Big assumption here

CURRENT DIFFERENTIAL EQUATION

$$I = -C_{ox}(V_{gs} - V_{cs} - V_{th})W\mu_n \frac{dV_c}{dx}$$

- We can differentiate to obtain this current
  - But that assumes we have the channel potential profile (hint: we don't)

WHEN YOU CAN'T DIFFERENTIATE INTEGRATE

$$\int_0^L I dx = -\int_{V_s}^{V_d} C_{ox} W \mu_n (V_{gs} - V_{cs} - V_{th}) dV_c$$

$$IL = -\mu_n C_{ox} W((V_{gs} - V_{th})V_{ds} - \frac{V_{ds}^2}{2})$$

$$I = -\mu_n C_{ox} \frac{W}{L}((V_{gs} - V_{th})V_{ds} - \frac{V_{ds}^2}{2}) = -K_n' \frac{W}{L}((V_{gs} - V_{th})V_{ds} - \frac{V_{ds}^2}{2})$$

I-V CHARACTERISTICS

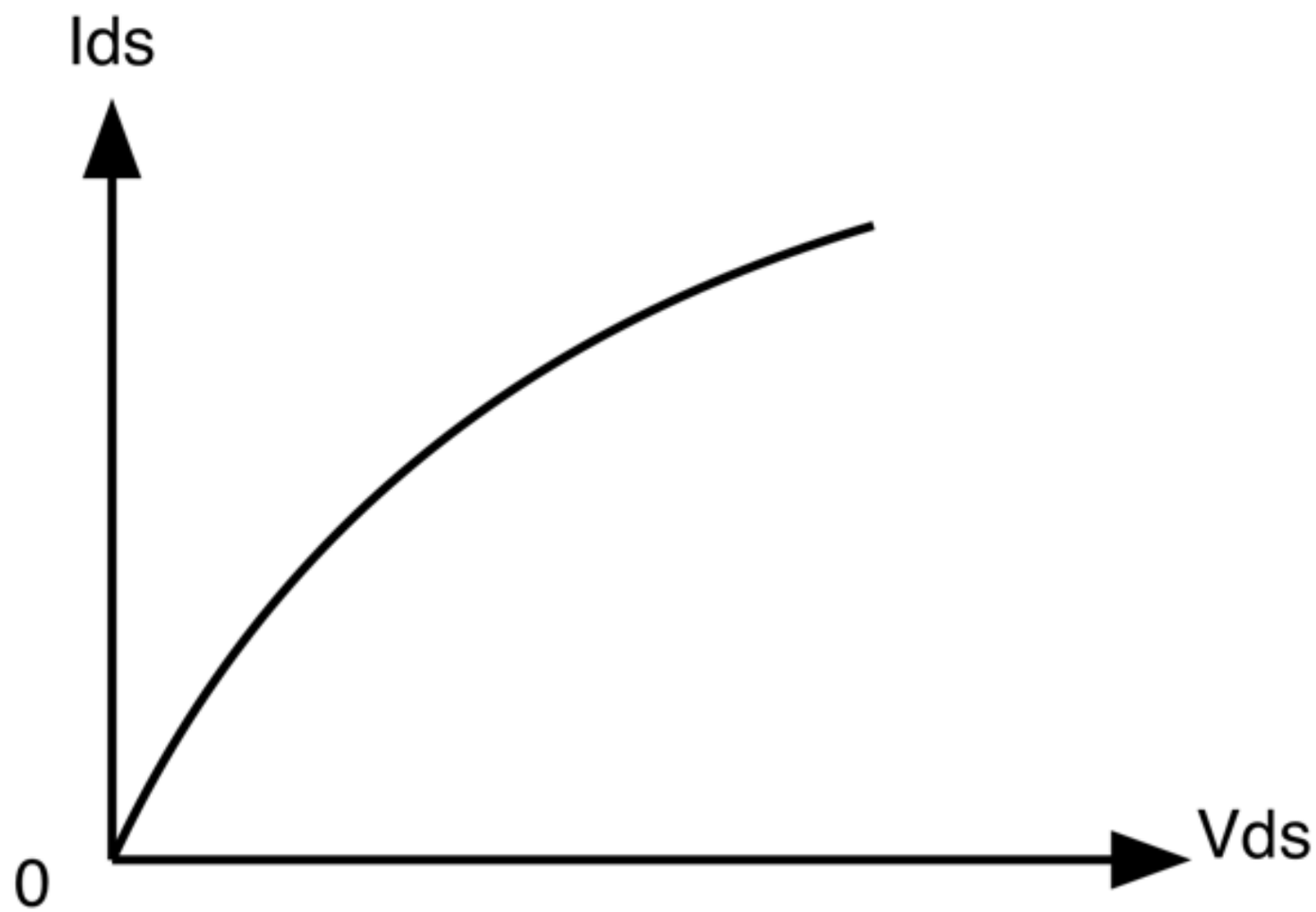

NOTES ABOUT CURRENT

- Why does current increase with W?
- Decrease with L?
- Increase with Cox?
- With Vds?
- With Vgs-Vth?

THE I-V CHARACTERISTIC

- This is the behavior of a resistance
  - A non-linear resistance
- This regime is called ohmic (why?), triode (why?), or linear (why oh why?)
- Where does the non-linearity come from?

CHANNEL PROFILE

- The voltage profile is quadratic
- The charge profile decreases quadratically towards the drain
- The band diagram mimics the potential profile
- Charges accelerate down the band
- Velocity increases
- What is current through the channel?

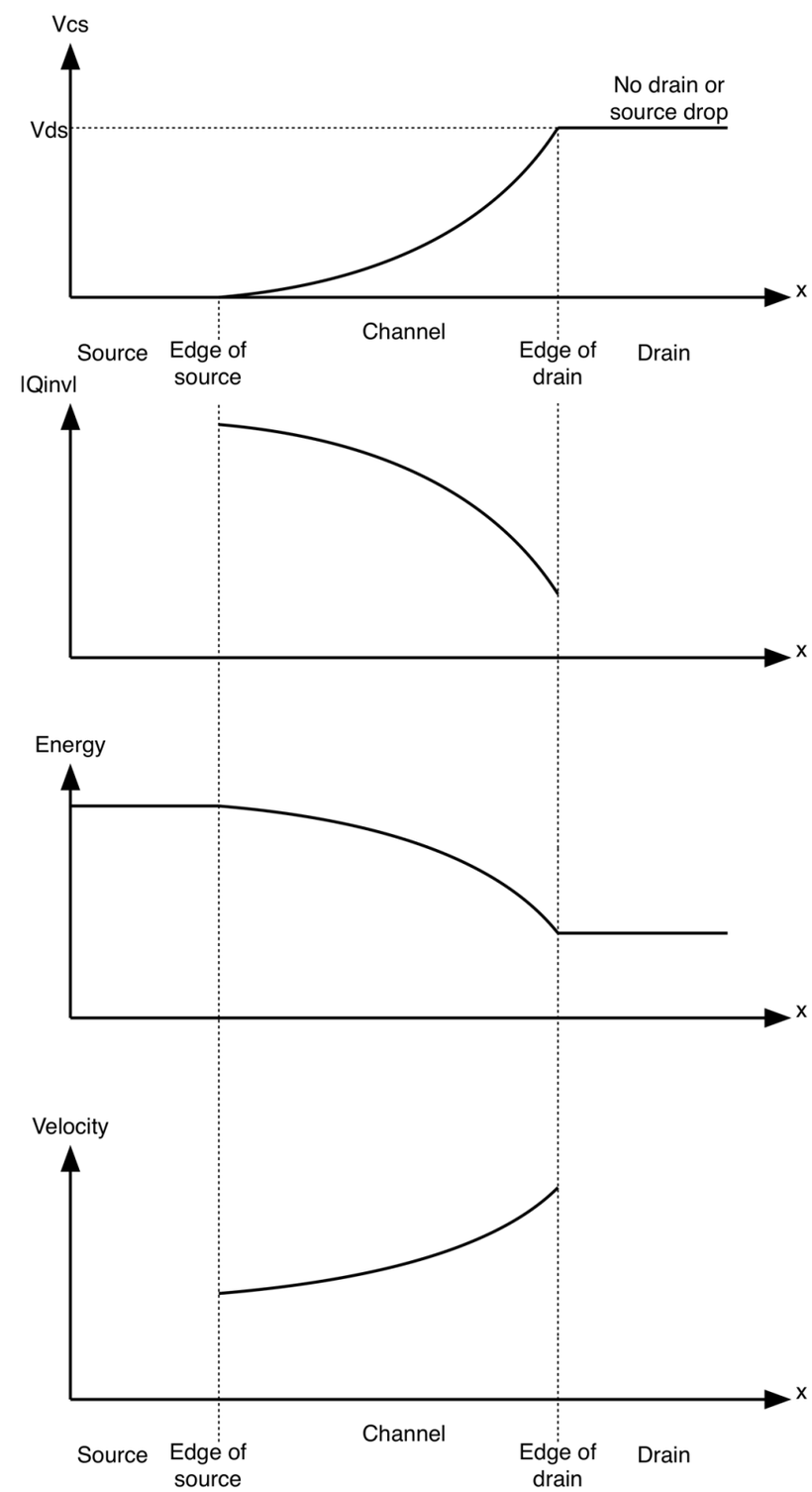

WHY IS CURRENT NON-LINEAR IN THE "LINEAR" REGIME?

- Two warring effects:
  - Increased drain to source potential increases drift, increasing velocity, and increasing current
  - More drain potential reduces charges at the drain, reducing current
- Current is the product of charge and velocity

$$Q_{inv} = -C_{ox}(V_{gs} - V_{ds} - V_{th})$$

THE MAXIMUM OF THE PARABOLA

- Can the I-V characteristic continue beyond the maximum?

$$I = K((V_{gs} - V_{th})V_{ds} - 0.5V_{ds}^2) \rightarrow \partial / \partial V_{ds}$$

$$\rightarrow (V_{gs} - V_{th}) - V_{dssat} = 0$$

$$V_{dssat} = V_{gs} - V_{th}$$

WHEN DOES THE CHANNEL DISAPPEAR AT THE DRAIN

$$Q_{inv} = -C_{ox}(V_{gs} - V_{ds} - V_{th}) = 0$$

$$V_{ds} = V_{gs} - V_{th}$$

- This is obviously an important point
- Pinchoff

WHAT HAPPENS TO CURRENT BEYOND PINCHOFF?

$$I_{sat} = I_{pinchoff} = K((V_{gs} - V_{th})V_{dssat} - 0.5V_{dssat}^2)$$

$$I_{sat} = \frac{K}{2}(V_{gs} - V_{th})^2$$

- It saturates (much more on why shortly)

FULL CURRENT-VOLTAGE RELATIONSHIP

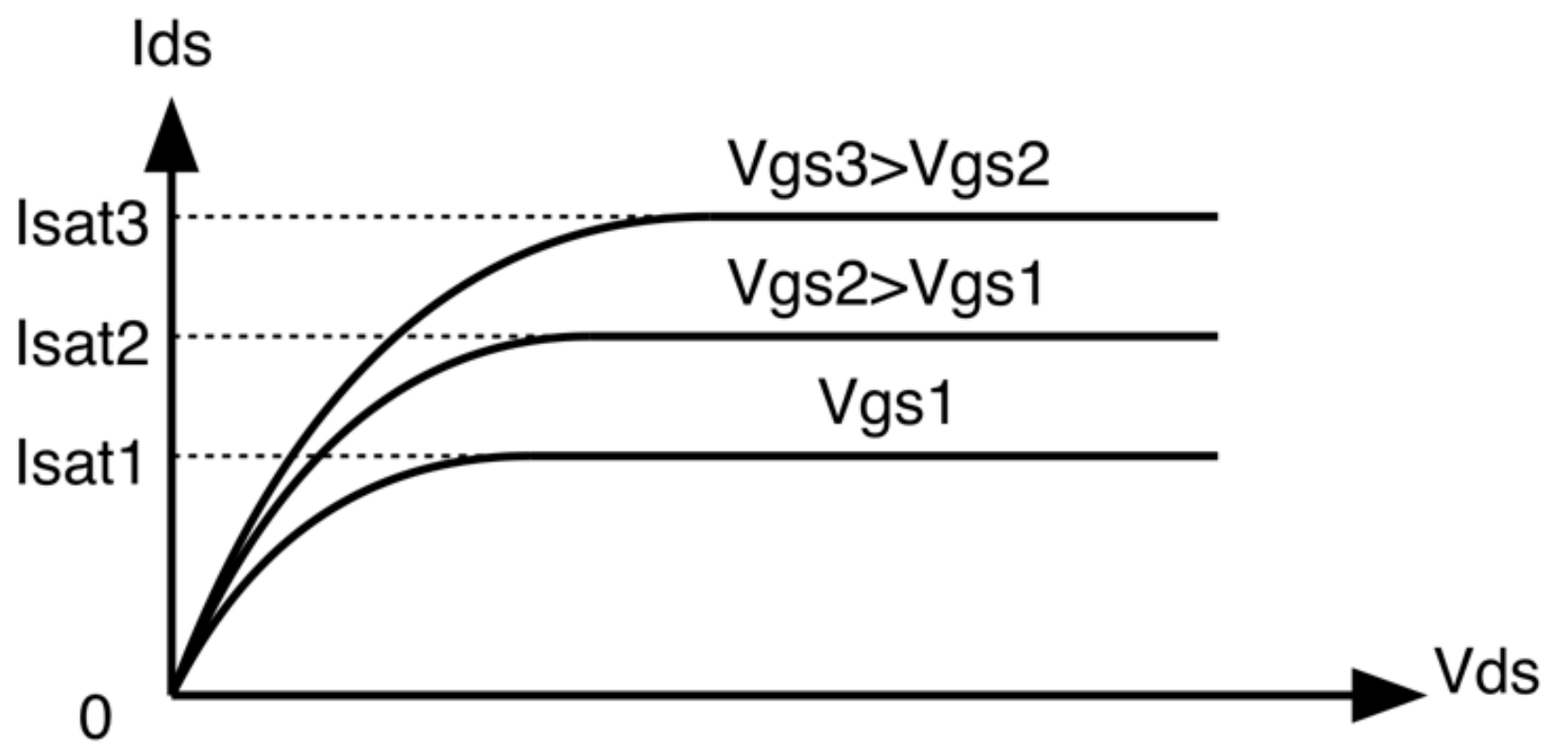

CHARGE AND VOLTAGE AT PINCH OFF

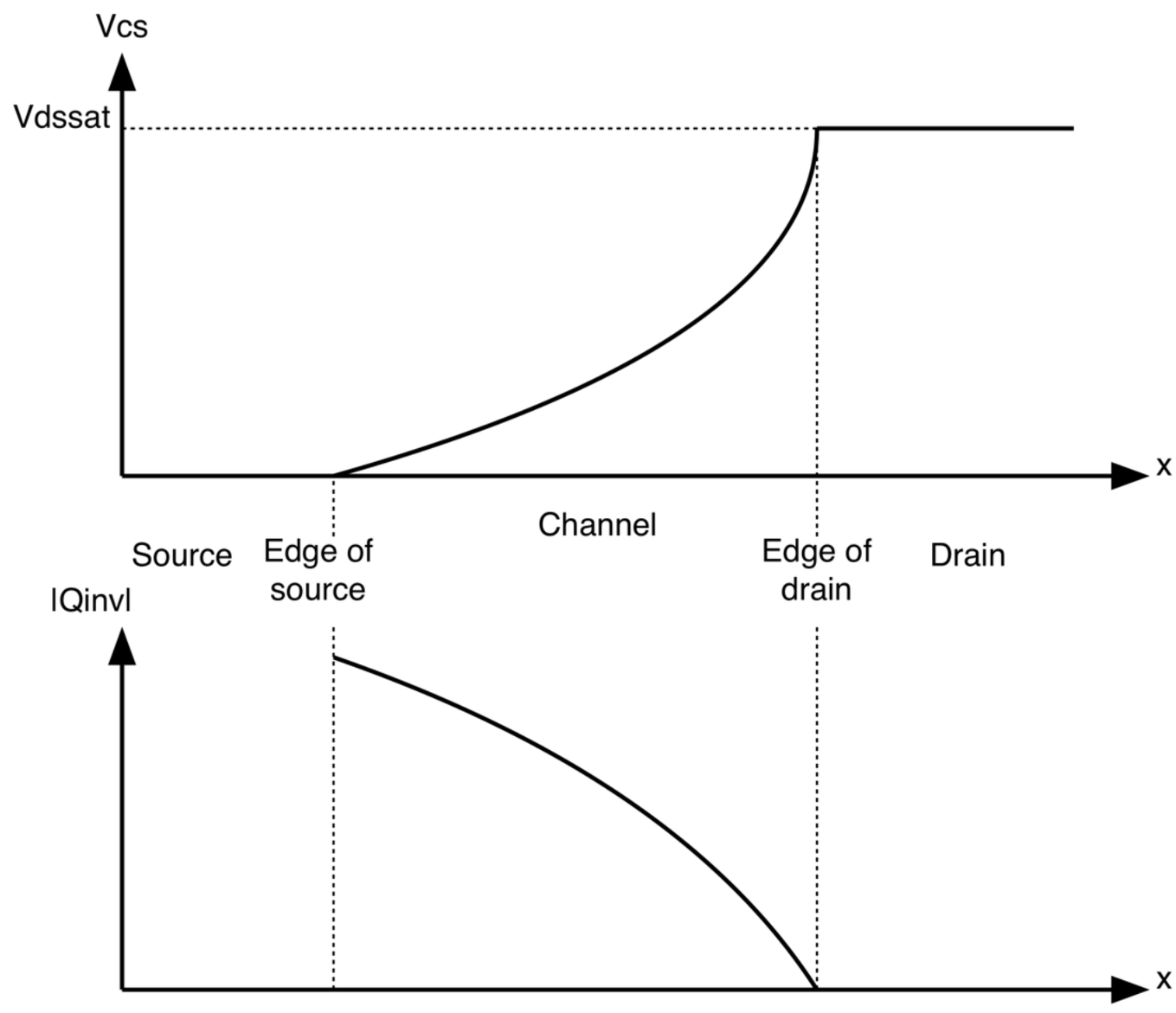

CHANNEL PROFILE IN SATURATION

- Charge still disappears at the drain
- The slope of the potential profile is still constant
- Current is still constant

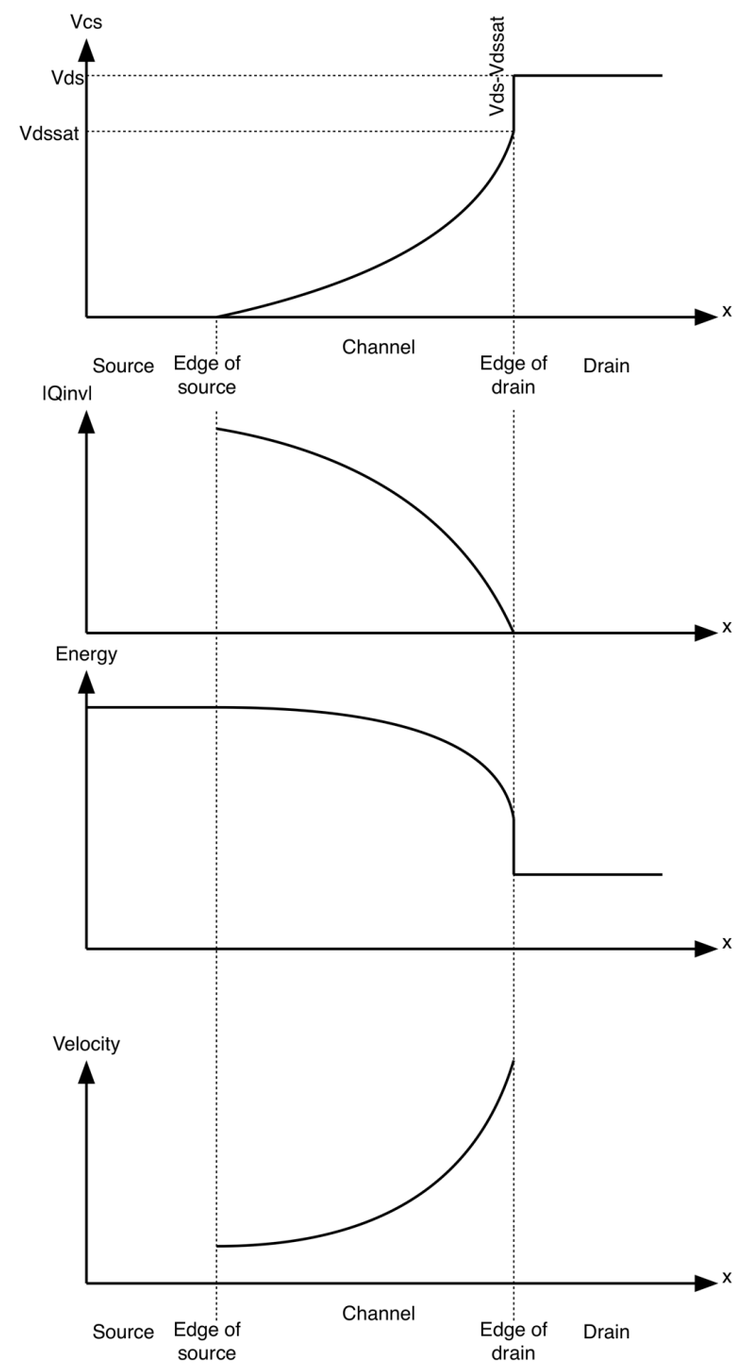

QUESTIONS ABOUT SATURATION

- How can current flow in the depletion point at the drain?

$$\sigma_{dep} = 0$$

$$\xi_{dep} = \infty$$

$$J = 0 \,.\, \infty = J_{sat}$$

QUESTIONS ABOUT SATURATION

- Why does the excess drain voltage fall entirely on the drain?

QUESTIONS ABOUT SATURATION

- Is the depletion region truly infinitely insulating?

$$V_{excess} = V_{ds} - (V_{gs} - V_{th})$$

$$J_{sat} = \xi_{dep}\sigma_{dep} = \frac{V_{excess}\sigma_{dep}}{x_{pinchoff}}$$

$$x_{pinchoff} = \frac{V_{excess}\sigma_{dep}}{J_{sat}}$$

$$\xi_{dep} = \frac{V_{excess}}{x_{pinchoff}}$$

QUESTIONS ABOUT SATURATION

- Does an infinite field mean electrons flow at infinite speed?

STRUCTURE OF PMOS

- Substrate is n-type
- Source and drain are p+

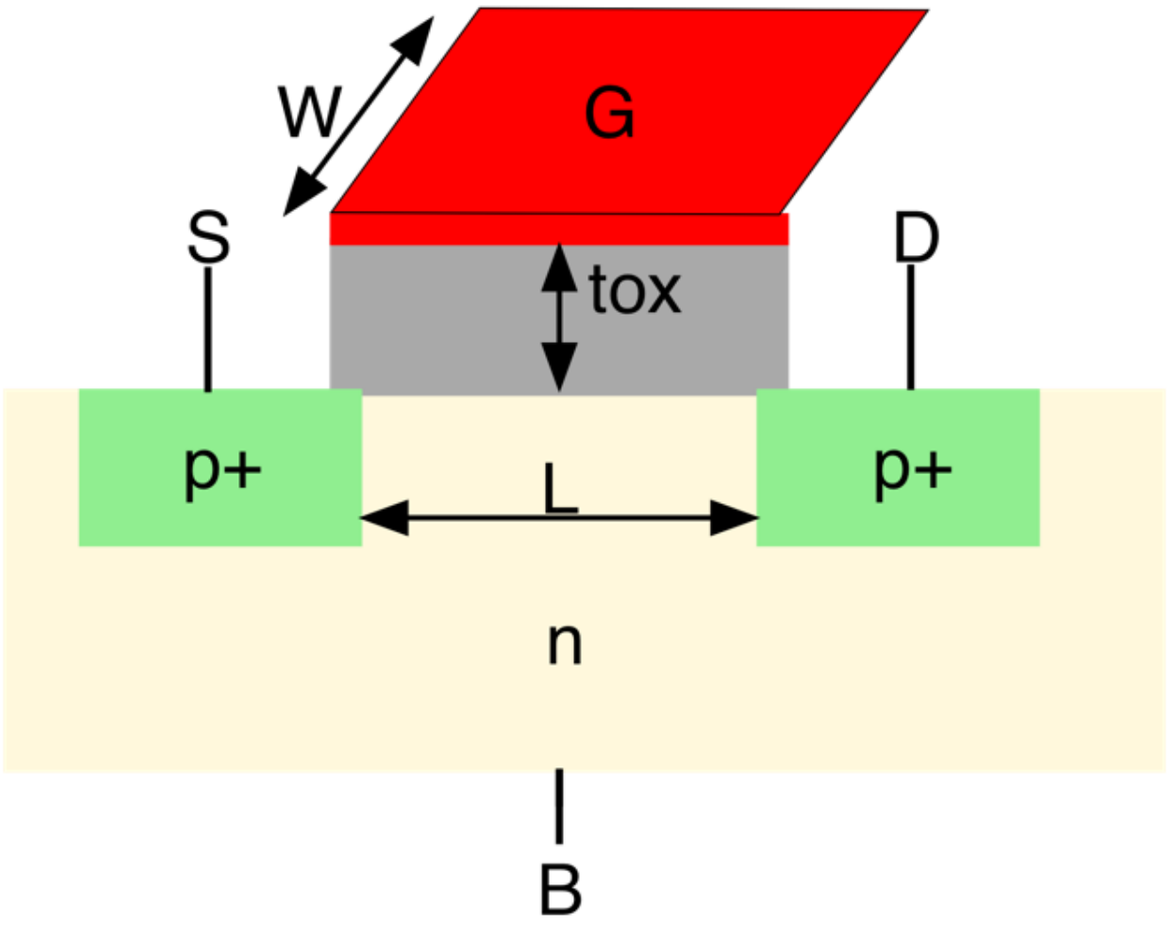

DIRECTIONS OF FLOW

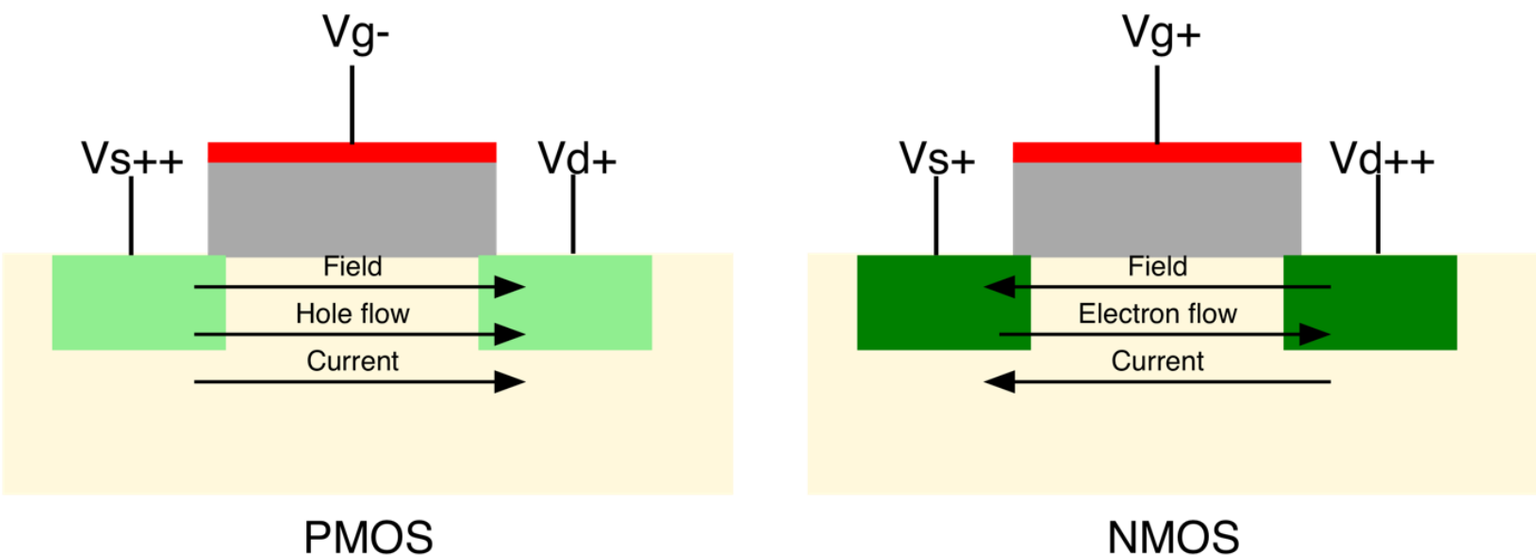

NOTES ON POTENTIALS

- Gate voltage needs to be negative relative to channel to create inversion layer
- Source is a source of holes
- Holes flow in the same direction as current
- Source is the higher potential

PMOS THRESHOLD VOLTAGE

$$V_{thp} = -\left|2\phi_b\right| - \frac{\sqrt{2qN_D\varepsilon_{si}(\left|2\phi_b\right| - V_{sb})}}{C_{ox}} + V_{fb}$$

- The threshold voltage is negative
- Vthp can be made equal to Vthn by managing substrate doping

PINCH OFF IN PMOS

$$V_{dssatp} = V_{gs} - V_{thp}$$

- As drain potential drops, the channel pinches off
  - Same expression as NMOS
- Both share the fact that field across the channel at pinch off is very high

MOSFET IN CUTOFF

$$I_{cutoff} = 0$$

- The channel does not exist
- To a (pretty meaningless) first order the impedance of the channel is infinite

OHMIC REGIME

$$I_{ohmic} = \mu_n C_{ox} \frac{W}{L}((V_{gs} - V_{th})V_{ds} - \frac{V_{ds}^2}{2})$$

- An inversion layer has been created
- The channel has not pinched off yet at the drain

SATURATION

$$I_{sat} = \mu_n C_{ox} \frac{W}{2L} (V_{gs} - V_{th})^2$$

- The channel has pinched off at the drain
- Current has lost its dependence on drain potential
- The transistor behaves as a voltage controlled current source

DETERMINING THE REGION OF OPERATION

$$V_{gs} < V_{th} \rightarrow cutoff$$

$$V_{gs} > V_{th} \rightarrow on:$$

$$\rightarrow V_{ds} < V_{gs} - V_{th} \rightarrow ohmic$$

$$\rightarrow V_{ds} > V_{gs} - V_{th} \rightarrow saturation$$

DRAIN IN SATURATION

$$I_{dssat} = \mu_n C_{ox} \frac{W}{2L} (V_{gs} - V_{th})^2 (1 + \lambda V_{ds})$$

- Channel length modulation introduces a dependence on drain voltage for saturation current

REGIONS OF OPERATION FOR PMOS

$$V_{gs} > V_{thp} \rightarrow cutoff$$

$$V_{gs} < V_{thp} \rightarrow on:$$

$$\rightarrow V_{ds} > V_{gs} - V_{thp} \rightarrow ohmic$$

$$\rightarrow V_{ds} < V_{gs} - V_{thp} \rightarrow saturation$$

- Same inequalities, reversed directions
- Everything should be substituted with the proper sign
- Current equations are identical to NMOS

CHANNEL LENGTH MODULATION IN PMOS

$$I_{dssat} = \mu_p C_{ox} \frac{W}{2L} (V_{gs} - V_{th})^2 (1 + \lambda_p V_{ds})$$

- The channel length modulation factor is negative

CIRCUIT SYMBOLS FOR MOSFET

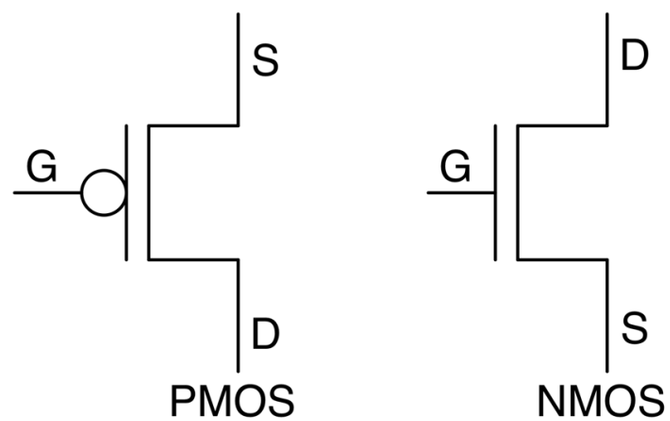

- Symbols stress that source and drain are determined only from operation

THE IDEAL SWITCH

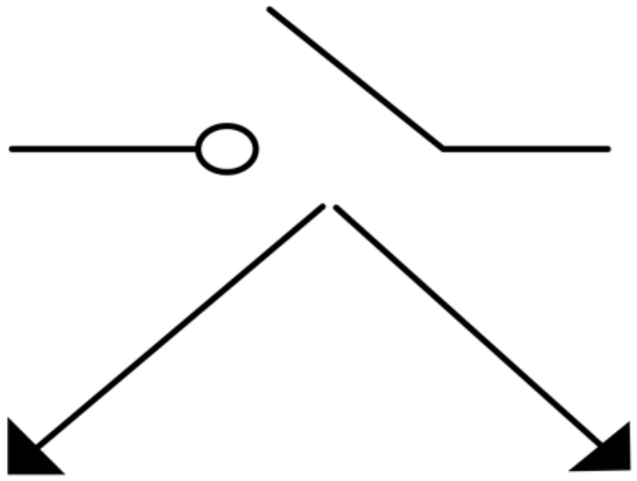

Ideal closed switch
short circuit

Ideal open switch
open circuit

MINIMUM RESISTANCE OF MOSFET

$$\frac{\partial I_{DS}}{\partial V_{DS}} = K((V_{GS} - V_{th}) - V_{DS})\Big|_{VDS=0} = K(V_{GS} - V_{th})$$

$$R_{\min} = \frac{1}{K(V_{GS} - V_{th})}$$

- Maximum conductance occurs at origin and can never be infinite

WHY IS SWITCH IMPEDANCE IMPORTANT

Basic capactior IV equation:

$$I_C = CdV/dt$$

$$dt = CdV/I_C$$

- Switch (MOSFET) impedance will determine delay

LIMITATIONS OF THE MOSFET MODEL

- The assumption that velocity (drift) is proportional to electric field
  - Velocity saturation -> reduction of available saturation current -> more delay -> worse scaling
- Leakage
  - Degradation of off resistance and more power dissipation
- We will often ignore channel length modulation
  - It is EXTREMELY important
- We will often ignore body effect
  - Not as significant as all the above

LOGIC FUNCTIONS AS A SWITCH NETWORK

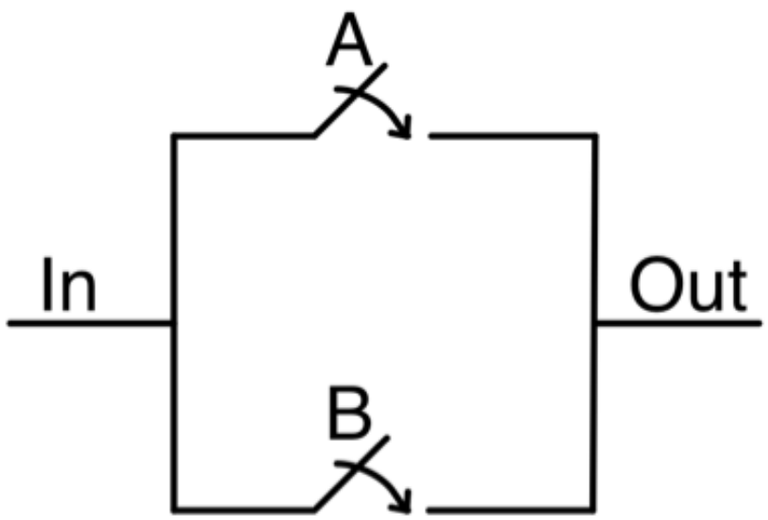

Out=In if A or B = 1

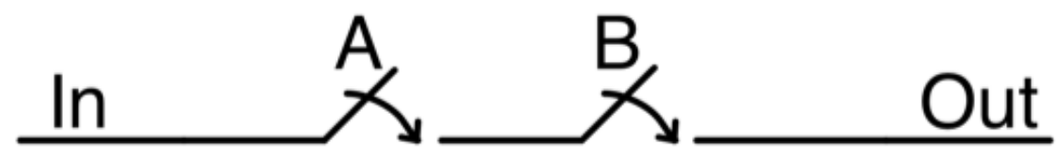

Out=In if A and B = 1

THE REGENERATIVE PROPERTY

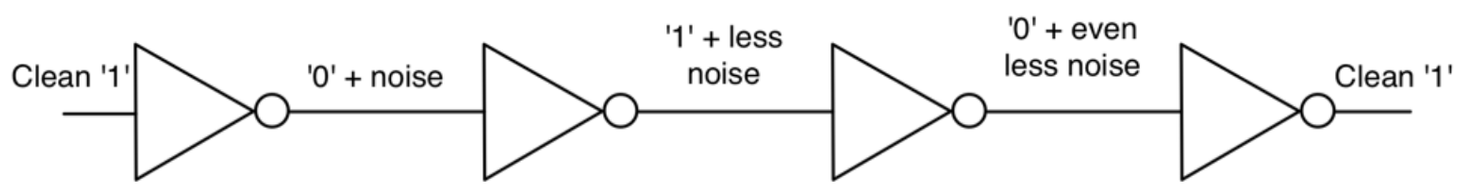

NOISE MARGINS IN DIGITAL LOGIC

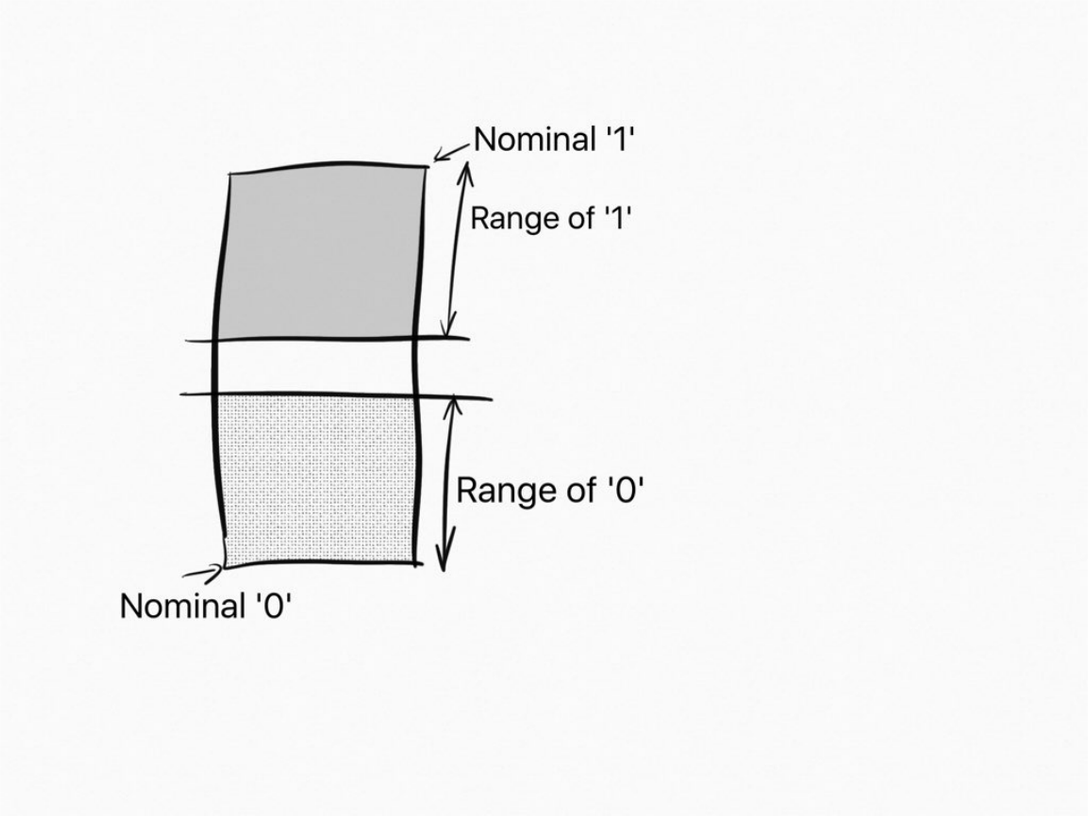

SCALING A MOSFET CIRCUIT

- As technology advances all dimensions are shrunk
- A technology node is characterized by the minimum possible channel length
- The scaling factor S is the amount of reduction in channel length between nodes

SCALING PERFORMANCE

Metric	Full Scaling	Constant Voltage Scaling	General Scaling
Dimensions W, L, tox	1/S	1/S	1/S
Voltages (Vdd, Vds, Vgs, Vth)	1/S	1	1/U
Area	1/S^2	1/S^2	1/S^2
Cox=εox/tox->1/tox	S	S	S
Cgate=Cox*W*L	1/S	1/S	1/S
I=>(W/L)CoxV^2	1/S	S	S/U^2
Delay=>Cgate*V/I	1/S	1/S^2	U/S^2
Power=VI	1/S^2	S	S/U^3
Power density = Power/Area	1	S^3	S^3/U^3
Power delay = Power * Delay	1/S^3	1/S	1/(SU^2)

FULL SCALING

- Delay scaling is excellent
- The speed advantage of BJT is lost
- Full scaling is not possible due to loss of noise margins

CONSTANT VOLTAGE SCALING

- Another extreme
- Field values grow dramatically
  - Dielectrics will catastrophically break down
    - Both the gate and punch through

GENERAL SCALING

- An intermediate case
- Potentials scale slower than dimensions

WHAT IS A LOGIC FAMILY

- An architectural approach towards building gates
- A logic family shares some properties:
  - Area
  - Static current and power patterns
  - Switching behavior
  - VTC

AREA

- The true area of a logic gate can only be obtained from the layout
- A (very rough) approximation is sum(W*L)
  - This approximation severely underestimates area
  - But in some cases it can be a useful comparison tool

STATIC POWER

- Static current will flow only if there is a direct path from supply to ground in the steady state

$P_{st} = I_{effective} V_{DD}$

$I_{effective}$ = effective current drawn from supply

$= I_H \alpha_H + I_L \alpha_L$

Where:

I_H = Current flow from supply when output is high

I_L=Current flow from supply when output is low

α_H = Proportion of time output is high

α_L = Proportion of time output is high

DYNAMIC BEHAVIOR

- Finite time to switch
- Occurs due to capacitive loading
- Families share capacitance patterns as well as current behavior

THE VTC

- The Voltage Transfer Characteristics
- A graph of Vout on the y-axis vs. Vin on the x-axis
- Its value is that it fully captures static behavior, including to noisy inputs
- Logic families share similar VTCs

POINTS OF INTEREST ON VTC

- Voh, Vol, Vih, Vil, Vm
- Each of these points is critical to defining inverter behavior
- NMh and NMl

VTC OF IDEAL INVERTER

- Voh and Vol are rail-to-rail values
- Vil=Vih=Vm
- The transition region is infinitely sharp
- The entire input range is a valid noise margin

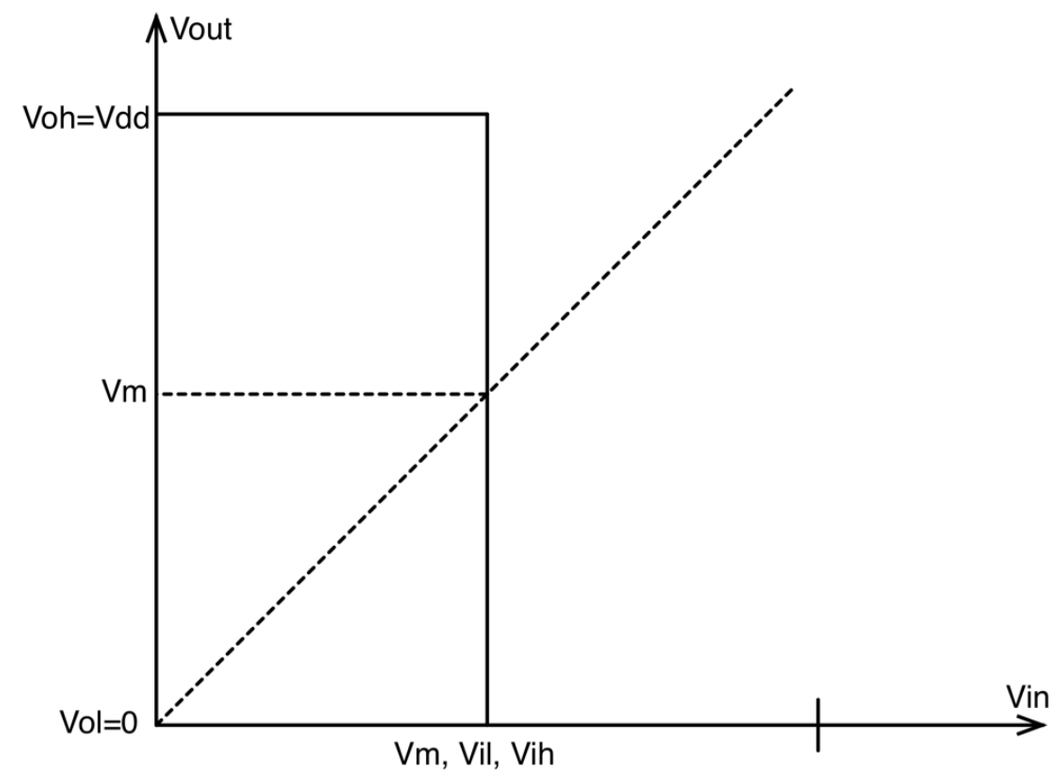

VTC OF REALISTIC INVERTER

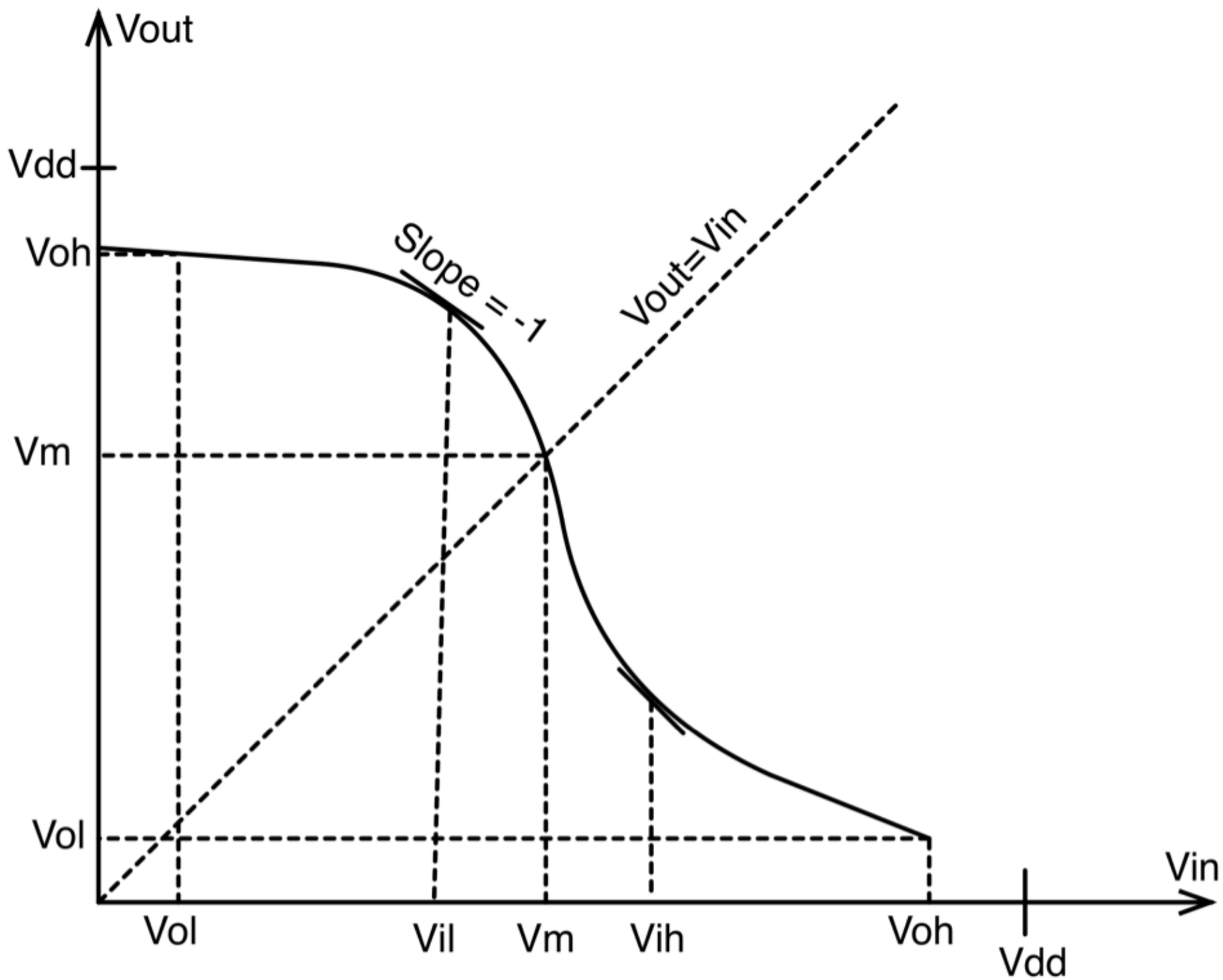

DEFINING NOISE MARGINS

- Why are Voh and Vol part of the definition?
- Why are slope=-1 points significant
- What about the transition zone

VTC GOALS

- Maximize noise margins
- Increase Voh and lower Vol to rail values
- Minimize the transition region by increasing its slope